MARK NO.	GRID LOCATION
1ST2	8b-9c/H1-G1 106.800

MATERIAL LIST FOR ASSEMBLY MKD' 1ST2 ONE No. REQD.

Part Mark	Size	No.	Length	Unit Wt./Item	Weight
a96	L75*75*10	2	130	1.4	2.9
m168	ISMC200	1	4746	106.2	106.2
m178	ISMC200	1	1278	28.6	28.6
m180	ISMC200	1	1027	23.0	23.0
p148	PL8*100	2	150	0.9	1.9
				Total Weight:	162.5 kg

BOLT LIST FOR ASSEMBLY MKD' 1ST2

Diam.	Grade	Type	Length	No.
M16	4.6	Site	50	4

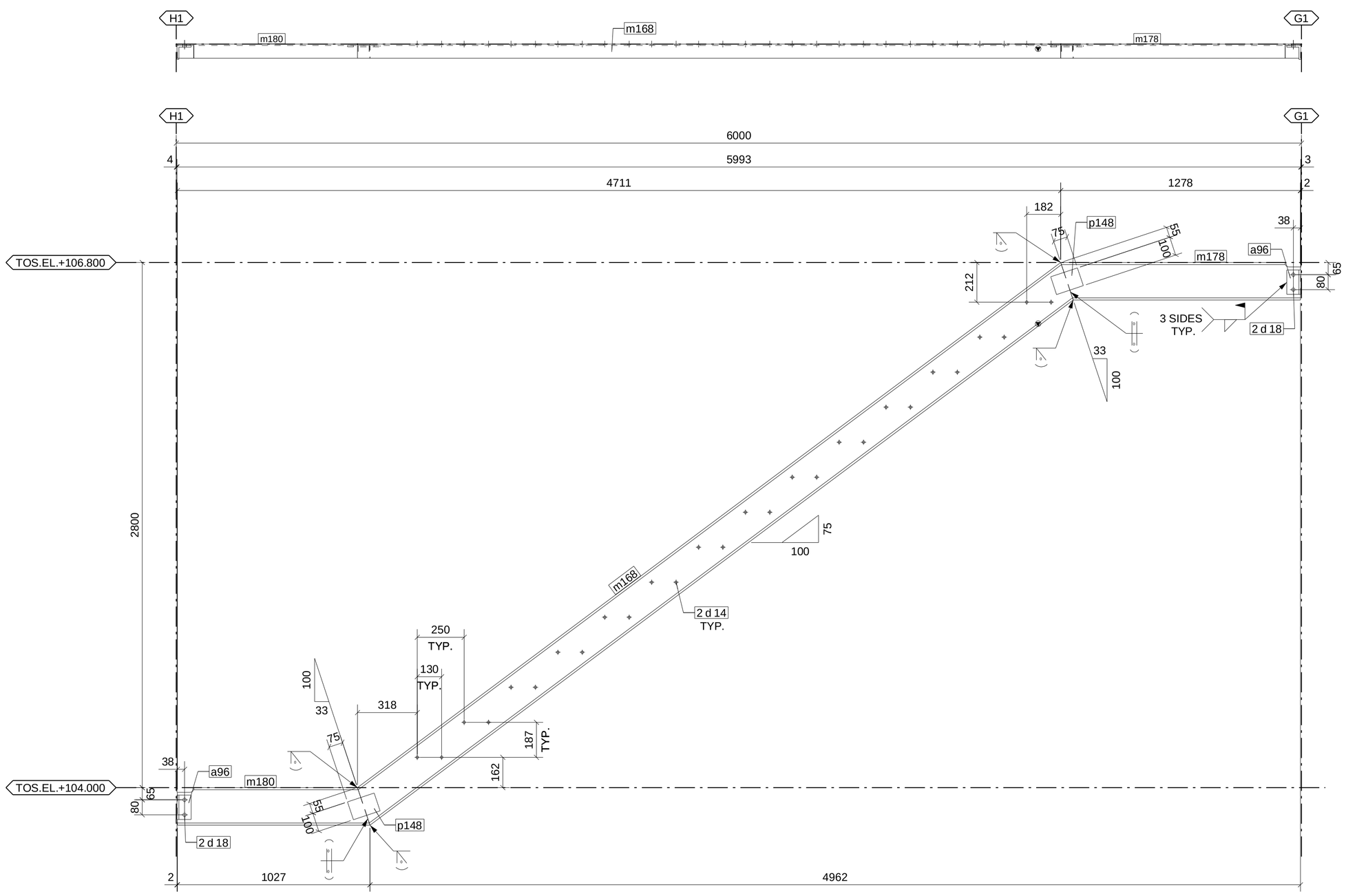

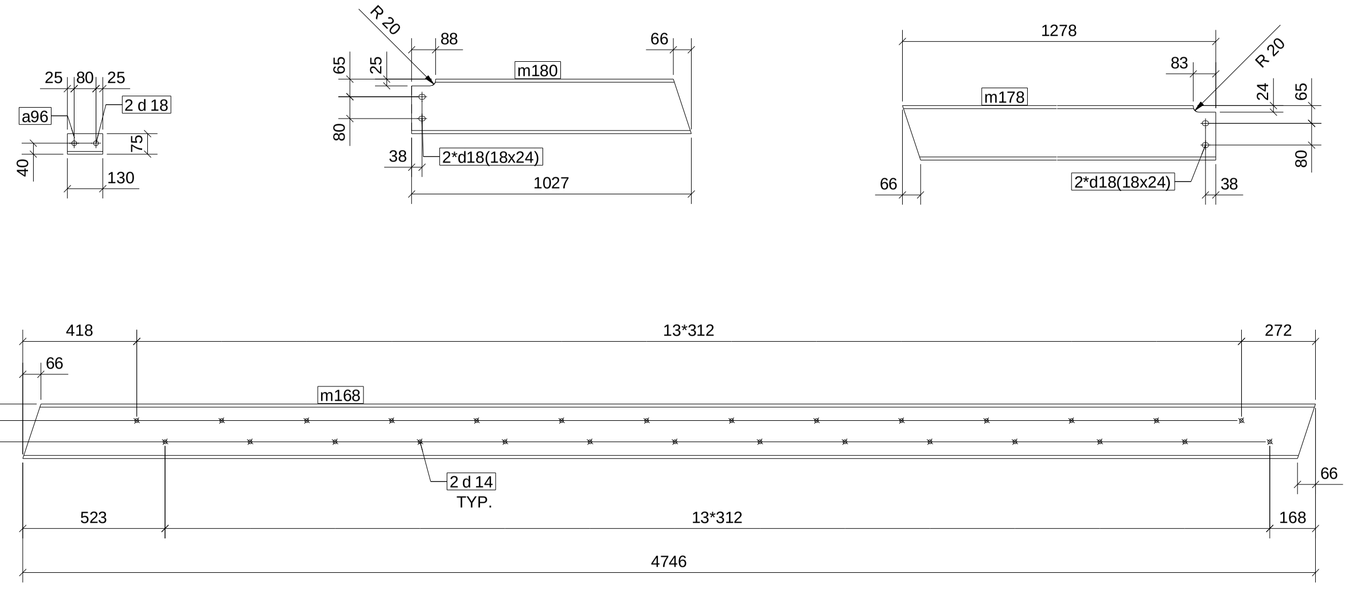

ONE No. STAIR REQUIRED AS DRAWN MKD' 1ST2

TITLE: PIPERACK PR-4B

DETAIL OF STAIR 1ST2